

HAZEMAG

Experience.
Innovation.
Results.

APSE

PRIMARY IMPACTOR

APSE Primary Impactor

SINCE 1946: Our journey started here with the introduction of the Andreas Impact Crusher and the beginning of HAZEMAG; now backed by a reference list well exceeding 75,000 machines. Our customers benefit from an extensive range of HAZEMAG services, realized in our industry knowledge, application expertise, innovative technologies and proven solutions. HAZEMAG customers are the very foundation and focus of our work. Your success is our goal! We call it "Partnership Unlimited – The HAZEMAG Way."

Today, HAZEMAG continues its commitment toward developing and introducing new, innovative ideas to improve the impactor performance, efficiency, adjustability, product size control and safety. This commitment is easily realized throughout our line of Primary Impact Crushers.

HAZEMAG APSE Series Impactor are designed as primary reduction units for materials of medium to low silica contents such as limestone, dolomitic limestone and gypsum.

HAZEMAG Primary Impactors are available in a capacity range of 250 – 3100 short ton/hour, depending on the machine selection. Individual lumps of feed materials weighing up to 2 tons and minus 60 inches in size can be processed.

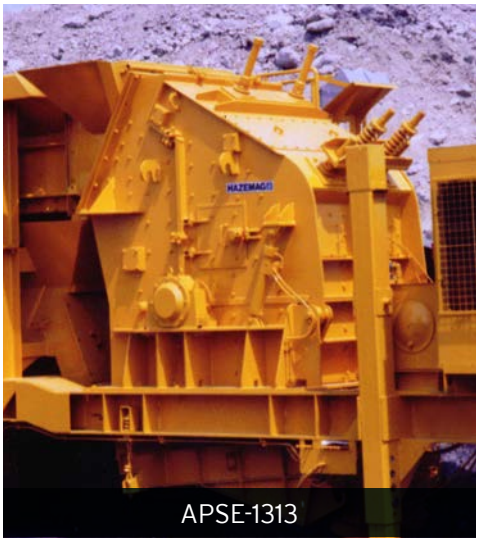
APSE-1313

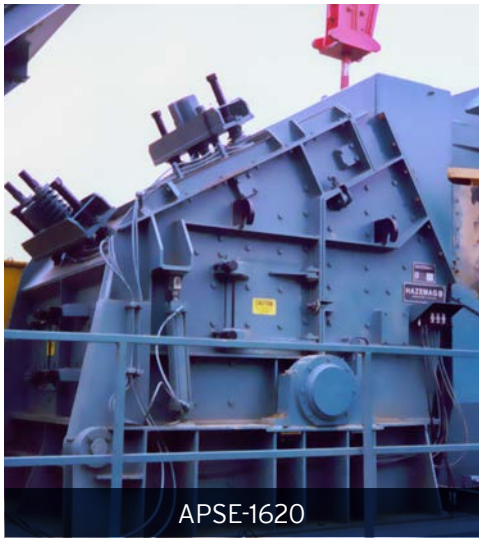
APSE-1620

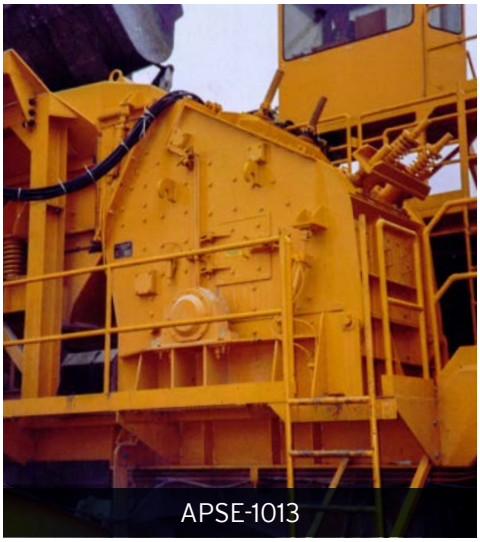
APSE-1013

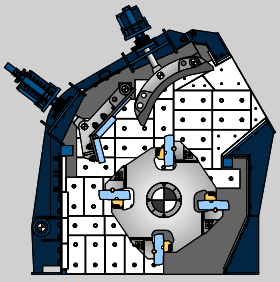

HAZEMAG APSE – Series Primary Impact Crusher is ideally suited for crushing medium-hard rock down to a well graded product size of 0 – 6 inch (75% passing 3") in a single pass. This machine is normally offered within a plant / system where secondary crushing is also present. However, due to its high reduction ratio, the need for multiple secondary units is normally eliminated.

For the recycling of concrete and asphalt, the APSE Series Primary Impact Crusher is an ideal choice to process recycled materials down to a product size of 0 – 4 inch (80% passing 2") in a single pass. The design of the plant, utilizing a single APSE Impact Crusher, has proven to be an excellent processing solution for recycling / demolition companies throughout North America.

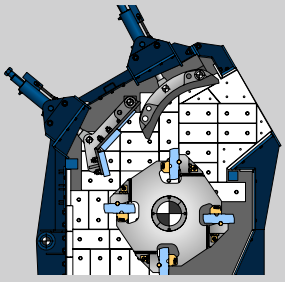

HAZEMAG APSE(H) – Series Primary Impact Crusher. This state-of-the-art control system offers a high level of impactor performance and operation technology that ensures a high quality production and consistent product gradation. HAZtronic – we call it intelligent crushing!

Available on all APSE primary impactor models. The computer controlled, fully automated hydraulic apron positioning system puts you in control, helping you produce the products you sell the most! Additional details on this system are covered within this brochure – HAZtronic System.

APSE Rotor System

ROTORS

The rotor is the "heart" and the most severely tested part of the impact crusher. During the course of HAZEMAG's +70 years of experience, particular emphasis has been placed on the rotor design, development and field of application.

Primary crushing requires heavy duty rotors with rugged, torsion-free rotor bodies providing a very high moment of inertia. Thus, the latest HAZEMAG primary rotors, patent protected, are engineered and produced as a welded steel construction, where individual cast discs are joined together under a special process to form the rotor body. This rotor body serves the purpose of holding and securing the impact elements; commonly called hammers or blowbars.

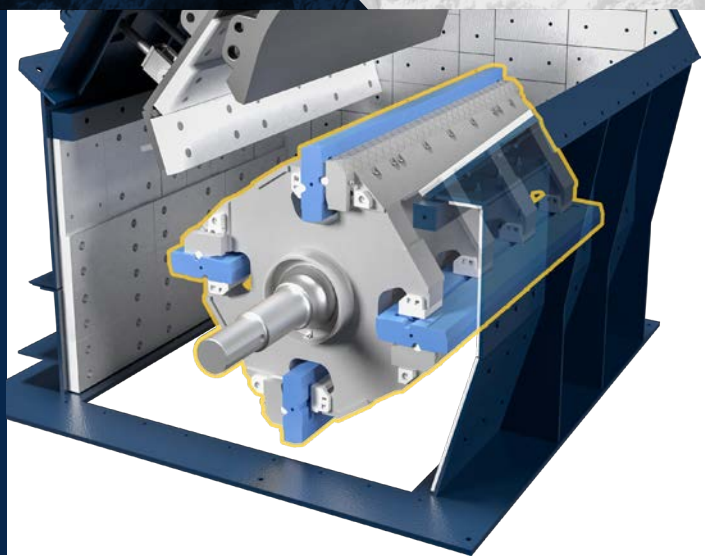

Q ROTOR
Heavy Duty Design

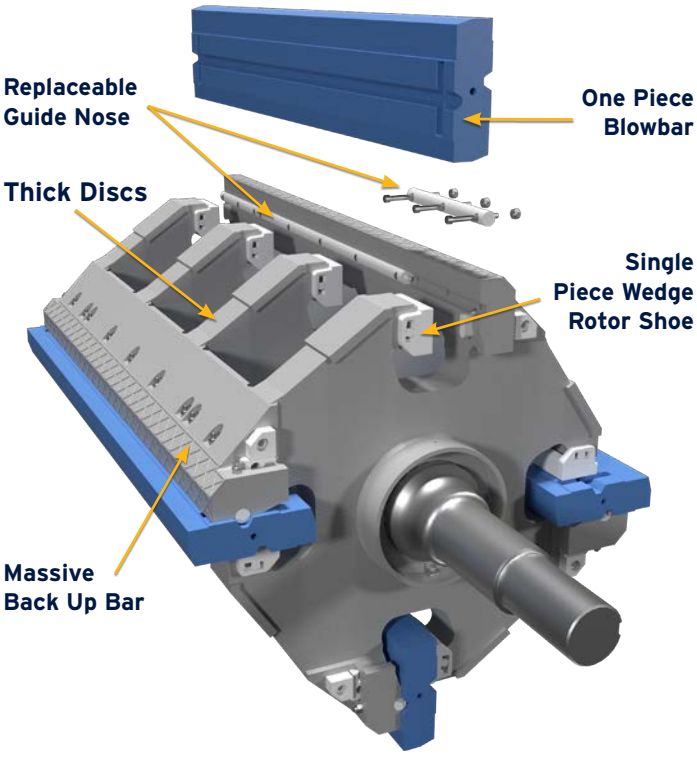

Q ROTOR (Standard)

The success of the HAZEMAG "Q" rotor can be found throughout the North American Aggregate Industry. Its very heavy duty construction, combined with its smart and fully functional design, has resulted in a primary rotor system that delivers positive and beneficial results on every level. Its blowbars, offering a utilization factor of 50%, are secured into place by means of a massive backing bar and single piece wedge. The "Q" rotor is an excellent choice for the processing of typical limestones not exceeding 40 inch in size.





Q ROTOR BLOWBAR EXCHANGE SAFETY & FUNCTION

The exchange or removal of the blowbars in the "Q" rotor is assisted by the means of a blowbar lifting device; standard and supplied on all APSE machines. Once the wedge clamping elements have been removed, the blowbars are now ready for rotation or exchange; followed by their repositioning back into the rotor body. Due to the size and weight of the "Q" rotor system, a rotor lock device is provided to ensure that the rotor body remains fixed into position during this procedure.

APSE Housing System

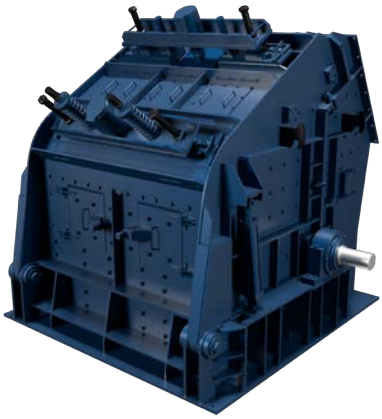

HOUSING SYSTEM

The primary crusher housing is a rugged, fabricated steel plate construction, with external bracing (ribbing) for increased strength. Depending on the processing requirement, the housing system (APSE-1615/1620/1622) can be further strengthened from the normal ¾ inch thick sidewalls up to 1½ inch thick sidewalls. For quick and easy inspection of the internal wear parts, the housing is fitted with large doors which are secured / opened by a special dove-tail locking mechanism. The housing system is stress relieved to increase its service life and to provide workmanship of the highest quality. The rear housing section opens hydraulically, permitting complete access to the internal wear parts. With emphasis on safety, the weight of the housing (open position) is transferred over center preventing it from closing on its own.





HOUSING LINER SYSTEM

With simplicity and function in mind, the housing is fitted with 1¼ inch thick, interchangeable, wear resistant liners that have been designed as a common shape. The liners have an interchangeability level of approximately 95%. A further benefit with this liner design is realized in the form of increased wear metal utilization. A worn liner, for example, can be repositioned from a high wear zone (within the rotor circle), to a low wear zone (outside the rotor circle), thus extending its service life. The standardized design of the housing liner system helps to further reduce the impactor cost of operation.





1¼ inch thick
Interchangeable
Wear Liner

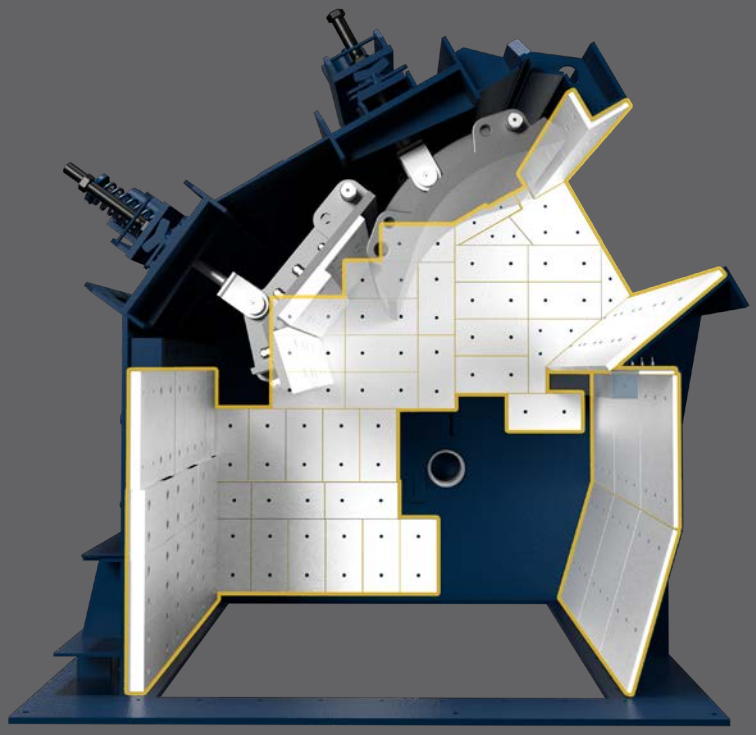

APSE Apron System

MONOBLOCK APRON

The front apron (primary impact zone) is designed and cast as a massive, single piece, reversible manganese component. Due to its massive weight and high impact / wearing zone, the design of the monoblock apron helps to provide a level of improved benefits such as: reduced stress to the housing system, increased service life, increased control over the product size, reduced downtime / maintenance and reduced operating costs. Depending on the application and characteristics of the raw feed material, such as concrete with steel, the design of the monoblock apron (without bolt-on liners that can fail) is a notable benefit.

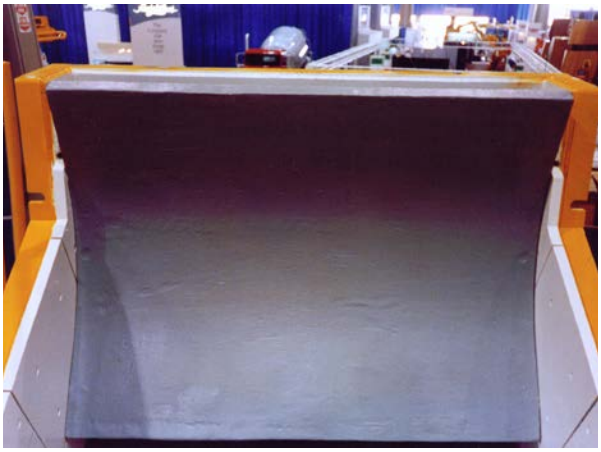

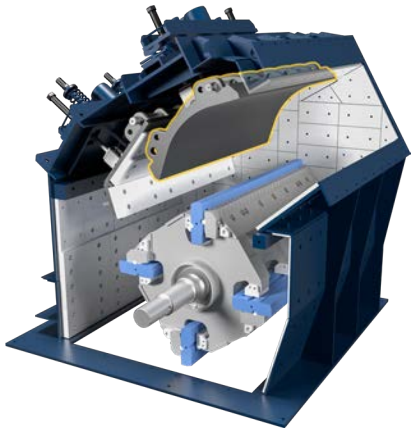



REAR APRON

The rear apron (secondary impact zone) is a heavy-duty fabricated component equipped with 3½ inch thick, replaceable bolt-on impact plates of high quality, wear resistant material. The impact wear liners (rear apron & rear wall) have been standardized to a common shape yielding extended service life and reduced spare parts stocking. This standardized design of the apron liner system helps to further reduce the impactor cost of operation.



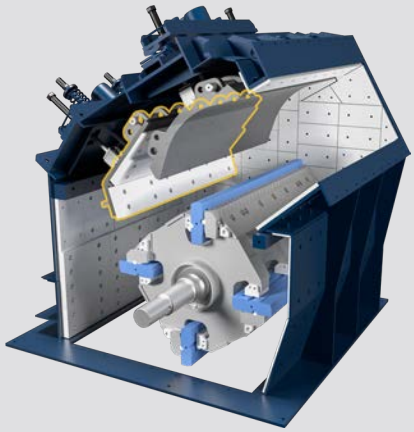

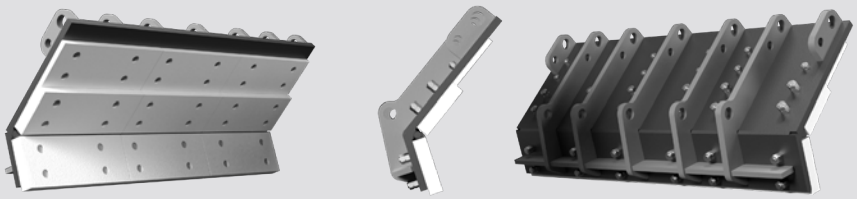

APSE Apron Adjustment System

APRON ADJUSTMENT SYSTEM

With function and simplicity in mind, the APSE Impactor is fitted with a standard impact apron adjustment system that utilizes a hydraulic assist / quick shim adjustment system. Once the desired gap position has been established, future apron adjustments compensating for normal blowbar wear are quickly and safely performed utilizing the quick shim system.

When apron adjustment is needed:

- Raise the apron using the hydraulic apron cylinder.
- Loosen the quick shim wing nut.
- Remove the appropriate number of shims equal to the amount of blowbar wear.
- Tighten the quick shim wing nut.
- Lower the apron using the hydraulic apron cylinder.







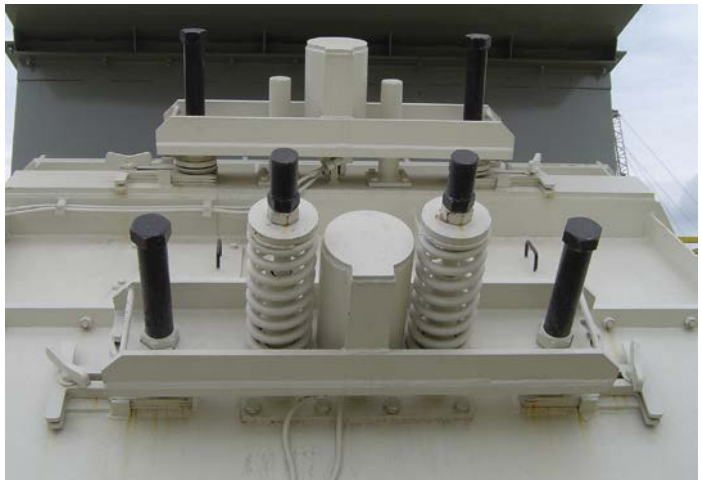

APSE HAZtronic System

HAZtronic

HAZEMAG Automated Control Technology



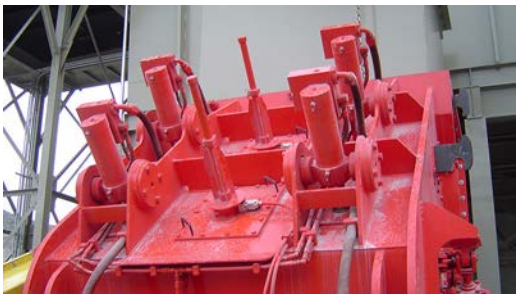



The exclusive and unique computer-controlled hydraulic adjustment system for the impact aprons (and third crushing path) allows for quick gap adjustments, optimum control over the product size, smoother crusher operation, tramp iron protection, reduced downtime and reduced operating costs. In our technically advanced HAZtronic system, the impactor performance can be optimized with recipes or pre-programmed apron settings, which further enhance the quality and consistency of the product. The HAZtronic system also allows you to optimize the correct apron settings with the varying material characteristics within the quarry. When fitted with either system, the APSE(H) impactor achieves a level of performance and economical operation that remains second to none. You are in control—producing the products you sell the most!

"OPERATION, ADJUSTMENT AND CONTROL"

With simplicity and function in mind, optimizing the performance of the APSE(H) impact crusher is enhanced by a touch screen control panel. Opening the impactor housing and adjusting the impact aprons is performed at the touch of a button. This system also monitors and visually displays the apron positions, bearing temperatures, hydraulic fluid temperatures and hydraulic fluid levels.

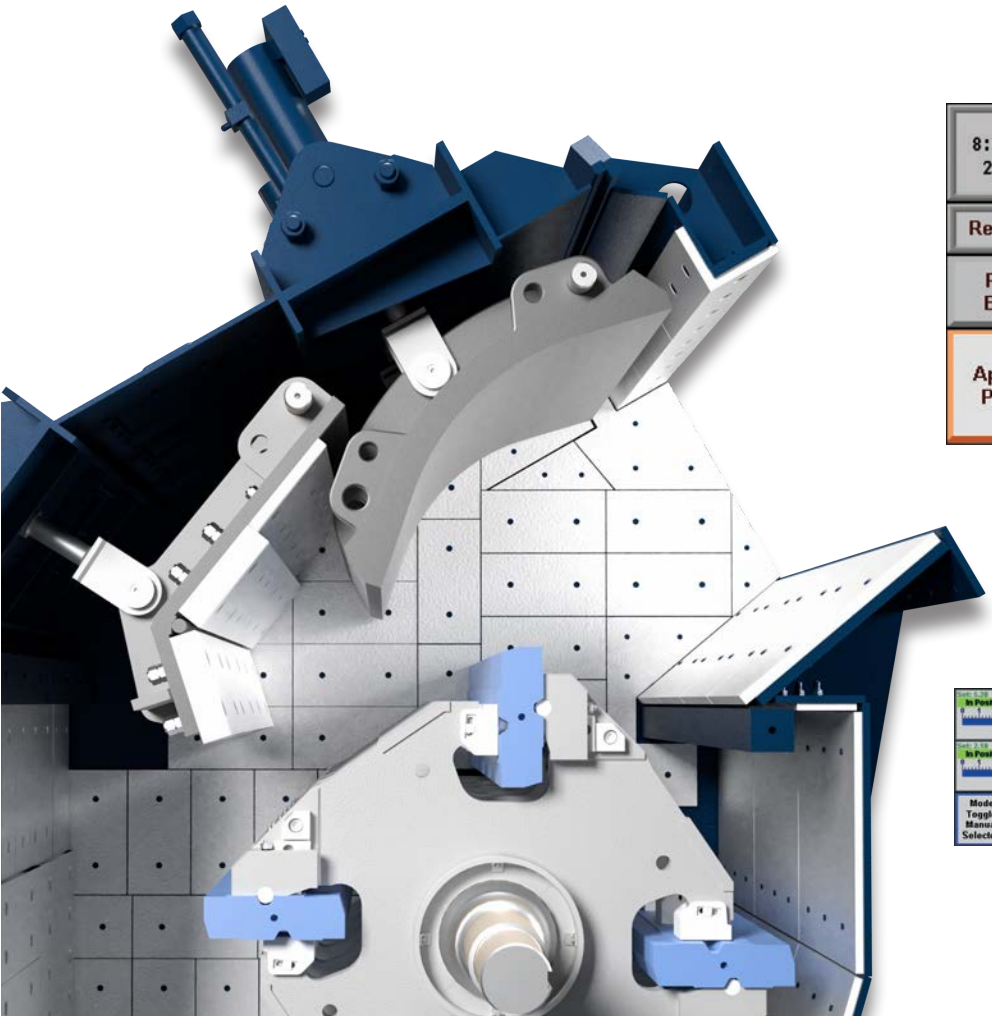

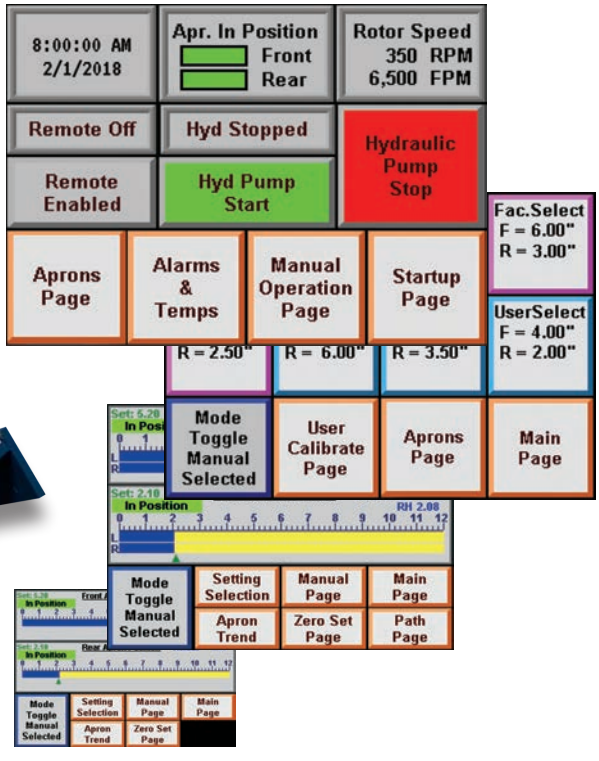

APSE Technology

TECHNOLOGY THAT WORKS FOR THE BENEFIT OF OUR CUSTOMERS

Behind every HAZEMAG impactor is found a wealth of experience, a deep commitment to research and development, a drive for innovation and a strong focus on your success: the HAZEMAG customer! Technology that works for the benefit of our customers; the next generation APSE impactor is here!

HISTORY AND EXPERIENCE
BEHIND THE APSE PRIMARY IMPACTOR

- Over half a century of design and application experience.
- Over 75,000 HAZEMAG impactors working worldwide
- Over 5,000 APSE impactors working worldwide.
- Over 200 APSE impactors working in the USA.
- HAZtronic System Technology – We invented it!



NEW TECHNOLOGY / DESIGN FEATURES

- New, improved housing system on all models.
- Extra heavy duty housing system (1½" thick sidewalls) on the APSE-1615, APSE-1620 and APSE-1622.
- Improved front apron design.

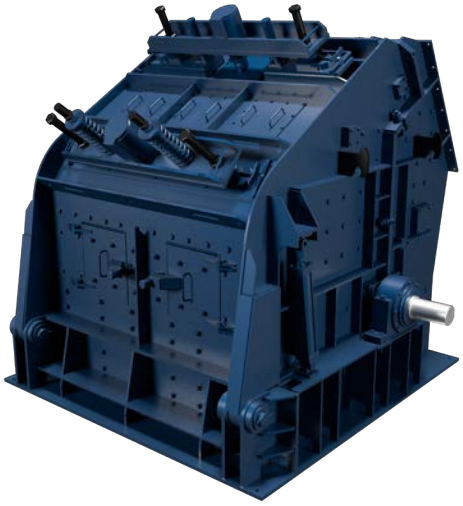

New Improved
Housing System

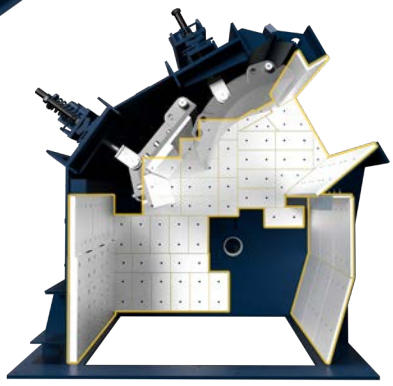

New Improved
Wear Liner Protection

The Andreas Impactor - We invented it!
The APSE Impactor - We invented it!

The HAZtronic System (computer-monitored / fully automatic hydraulic apron adjustment) delivers a level of impactor performance and technology that puts you in control – producing the products you need and sell the most. The HAZEMAG HAZtronic System has proven its worth and value in meeting the demands for:

- Consistent Product Size Control
- High Quality / Well Graded Product Gradation
- Optimum Impactor Efficiency
- Reduced Impactor Maintenance
- Reduced Impactor Downtime
- Technology / Automation
- User Friendly Control Functions
- Reliability / Performance



APSE Primary Impactor

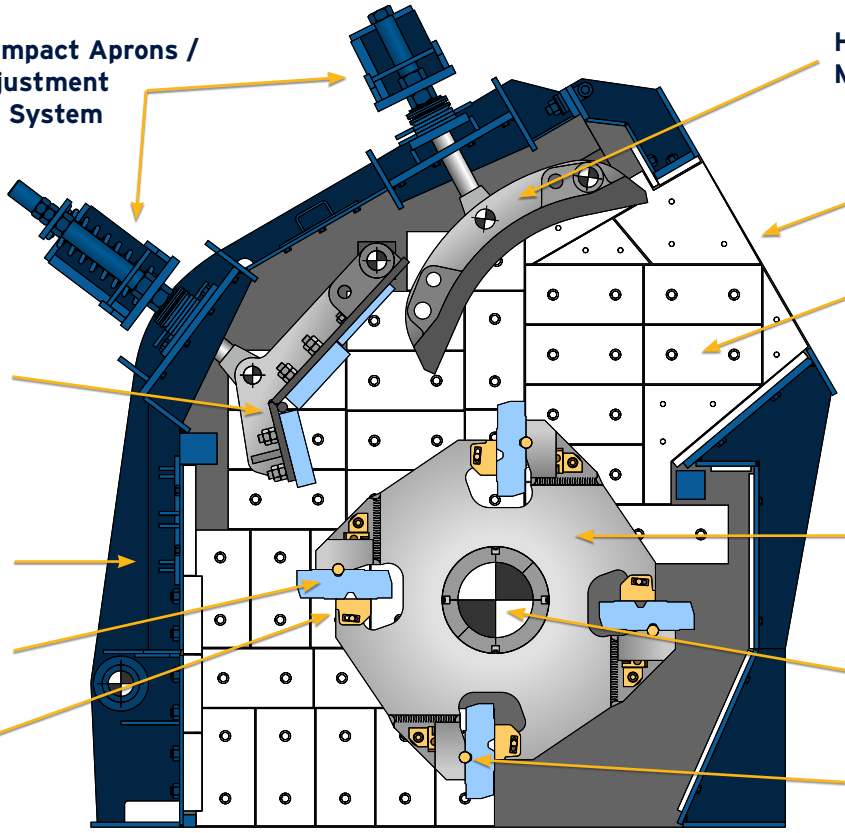

CRUSHER SPECIFICATIONS

Model	Capacity Tons/ Hr (Tonnes)	Power Requirements HP (kw)	Inlet Size Inch (mm) (H x W)	Maximum Feed Size Inch (mm)	Rotor Size Inch (mm) (D x W)	Weight Lb (kg)
APSE-1010	100 (90)	100 (75)	26 x 40 (660 x 1020)	16 (400)	40 x 40 (1020 x 1020)	23,600 (10,725)
APSE-1013	150 (135)	200 (150)	26 x 54 (660 x 1360)	20 (500)	40 x 53 (1020 x 1340)	28,500 (12,950)
APSE-1310	125 (113)	150 (112)	34 x 40 (865 x 1020)	20 (500)	53 x 40 (1340 x 1020)	33,200 (15,090)
APSE-1313	250 (230)	250 (185)	34 x 54 (865 x 1360)	24 (600)	53 x 53 (1340 x 1340)	37,900 (17,225)
APSE-1315	300 (275)	350 (260)	34 x 60 (865 x 1520)	24 (600)	53 x 59 (1340 x 1500)	41,100 (18,680)
APSE-1320	400 (360)	500 (375)	34 x 80 (865 x 2030)	24 (600)	53 x 79 (1340 x 2010)	53,400 (24,275)
APSE-1515	400 (360)	500 (375)	37 x 60 (950 x 1520)	28 (700)	59 x 59 (1500 x 1500)	44,700 (20,320)
APSE-1615	450 (400)	500 (375)	35 x 60 (890 x 1520)	32 (812)	64 x 59 (1610 x 1500)	58,300 (26,500)
APSE-1620	500 (450)	600 (450)	35 x 80 (890 x 2030)	32 (812)	64 x 59 (1600 x 1500)	68,500 (31,140)
APSE-1622	600 (550)	700 (525)	35 x 90 (890 x 2270)	36 (915)	60 x 89 (1600 x 2250)	75,700 (34,410)

Note: Performance details relate to medium-hard limestone.

HAZEMAG Partnership







PARTNERSHIP

What does it mean to you? At HAZEMAG we are committed to providing a level of partnership that is second to none. Everything we do from the initial presentation of our products, to the acceptance and processing of your order, to providing service and spare parts support after the sale, is done with a goal of exceeding your expectations.

SALES

We are here to serve your needs with application assistance, machine selection, quotations and sales presentations. We are supported by a network of knowledgeable and experienced factory-trained representatives.

SPARE PARTS

We serve your needs with a knowledgeable staff backed by a multi-million dollar spare parts inventory. We will help you achieve the optimum level of machine performance and economical operation with the right part and the latest technology, in stock and shipped on time.

ENGINEERING

We are here to serve your needs with engineering support, design guidance, project planning and management. Our dedication to impactor design excellence is backed by leading-edge computer design technology and proven by thousands (+75,000) of successful crusher installations.

CUSTOMER SUPPORT

We are proud of our dedicated staff who take pride in providing a level of after the sale support and service that is second to none. They are here to assist you with machine optimization, training, inspections and repair. We call it "Partnership Unlimited – The HAZEMAG Way"

It's All About You! The HAZEMAG Customer.

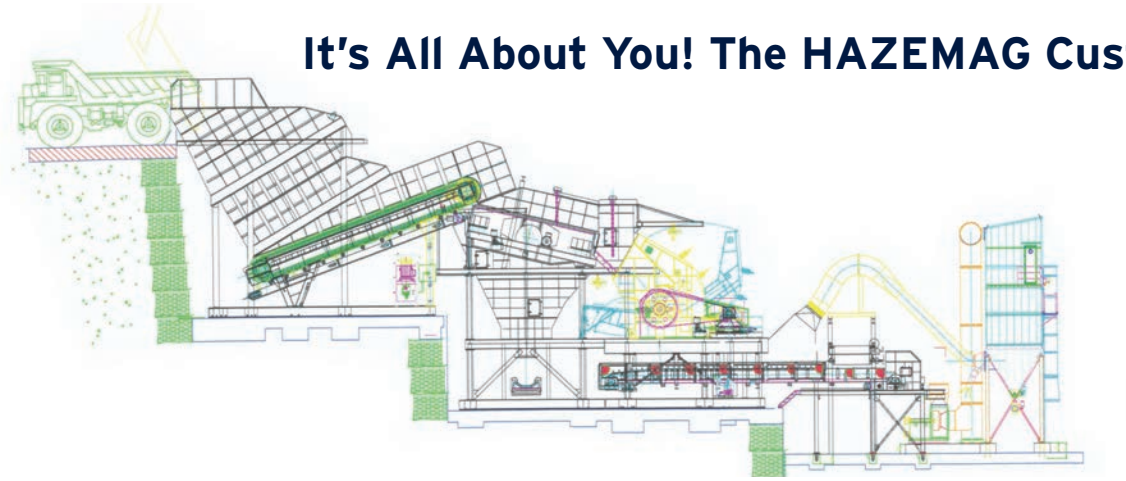

THE HAZEMAG DIFFERENCE

Hazemag Apron Feeders and Roller Screens are proving their worth around the world with outstanding, dependable performance. The latest generation apron feeders and roller screens are engineered and designed to ensure total application success, flexibility, highly reduced maintenance and field proven reliability on every level.





Apron Feeder

- Heavy duty, fabricated construction.
- Capacities up to 4,000 ton/hour.
- Overlapping, extra heavy-duty flight pans.
- Excellent, reliable performance under difficult material conditions.
- Variable speed; electro-mechanical or hydraulic.
- Proven success around the world!

Roller Screen

- Heavy duty, fabricated construction.
- Capacities up to 4,000 ton/hour.
- Exclusive "chain link" shaft connection system.
- Excellent, reliable performance under difficult material conditions.
- Exclusive, optional "form fit" shaft wear protection system.
- VARIOwobbler; the ability to adjust the gap setting at the touch of a button.
- Proven success around the world!

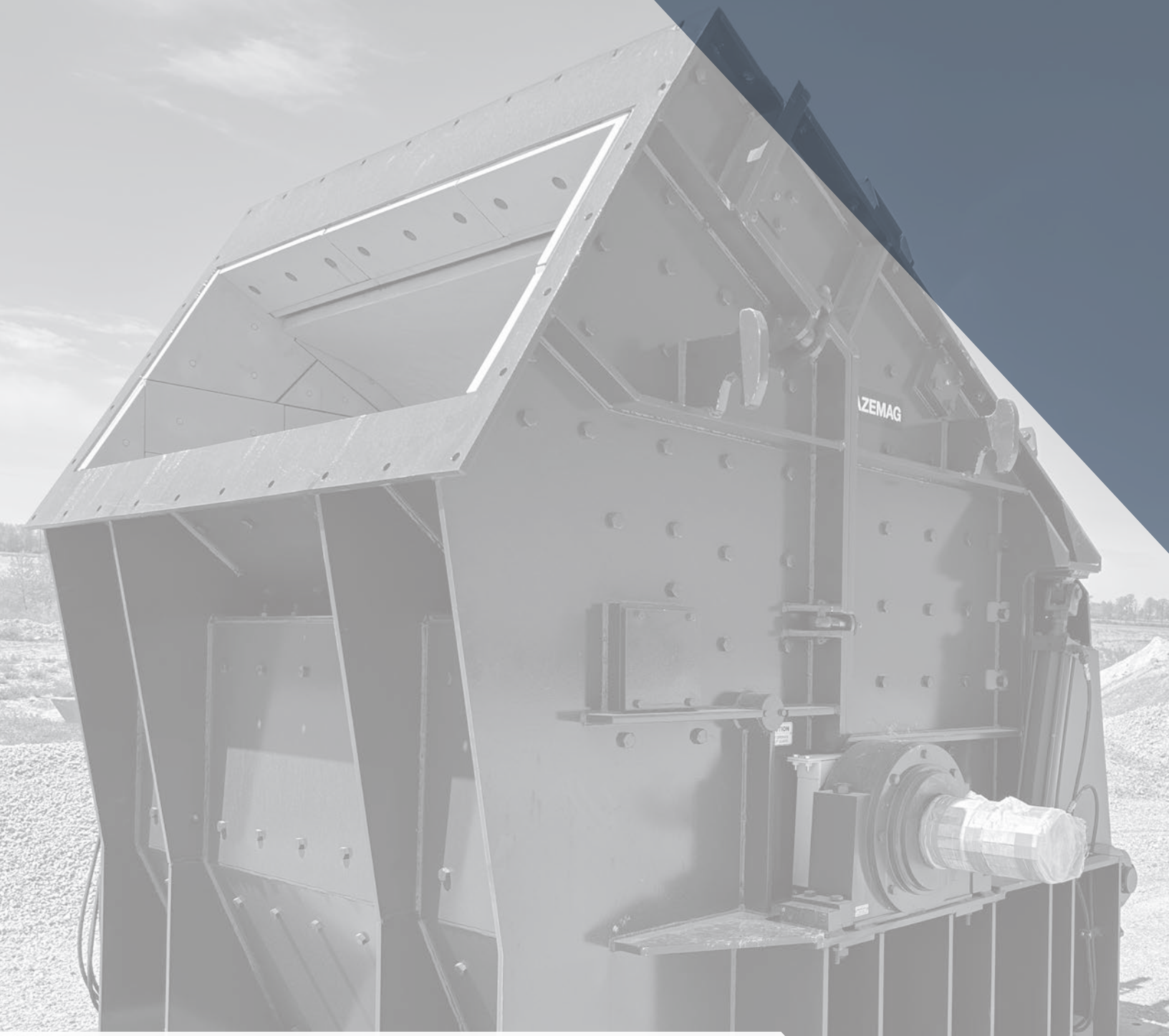

Experience. Innovation. Results.

HAZEMAG USA
109 Development Drive
Mt. Braddock, PA 15465
P.O. Box 1064
Uniontown, PA 15401

724 439 - 3512
724 439 - 3514
info@hazemag.com
na.hazemag.com

HAZEMAG Canada
1 Marconi Court, Unit #10
Bolton, ON
L7E 1E2

905 857 - 9623
905 857 - 3025
info@hazemag.ca
na.hazemag.com